Precision digital pressure gauge
Model CPG1500

for further approvals
see page 4

Applications

- Oil and gas industry
- Maintenance and service facilities
- Calibration service companies and service industry
- Simple calibrations directly on site

Special features

- Measuring ranges up to 0 ... 1,000 bar (0 ... 15,000 psi) (vacuum and absolute pressure ranges also available)
- Accuracy: Up to 0.05 % (incl. calibration certificate)
- Intrinsically safe version
- Logger function with up to 50 measured values per second
- Communication with WIKA-CAL software over WIKA-Wireless

Precision digital pressure gauge, model CPG1500

Description

General information

The model CPG1500 precision digital pressure gauge takes the concept of an analogue gauge, and raises it to a level only matched by digital calibrators. The accuracy of digital measurement technology and the simplicity of an analogue gauge are combined together to create the CPG1500, which in terms of performance, ease-of-use, and instrument features, is unmatched in the pressure measurement market.

Accuracy

The CPG1500 offers an accuracy of 0.1 % of span (optional 0.05 % of span) and is temperature-compensated in the range of -10 … +50 °C (14 ... 122 °F). Readings can be displayed in one of 21 standard units or also in customer-specific units, so that intricate conversions are avoided.

Sampling rate

The measuring rate can be user-defined to match the type of measurement required. Standard applications usually use three measured values per second. If required, this rate can also be set to 50 measured values per second.
Via an energy-saving function, the CPG1500 switches automatically into “sleep” mode, in this mode the battery life can be increased up to 2,500 hours.

Features

Through the new and innovative menu navigation, simple operation is ensured. The clear display, with integral bar graph display and large text area, assists with the effective analysis of the widest variety of measuring points.
With the MIN/MAX function, the highest and lowest pressures can be accessed immediately and saved automatically.

Data sheets showing similar products:
Digital pressure gauge; model CPG500; see data sheet CT 09.01
Test pumps, hydraulic; CPP series; see data sheet CT 91.05
Test pumps, pneumatic; model CPP30; see data sheet CT 91.06
Calibration software; WIKA-CAL; see data sheet CT 95.10

WIKA
Part of your business

Software
WIKA-CAL calibration software is available for the CPG1500. WIKA-CAL also offers, over and above PC-supported calibration, the management of the calibration and instrument data in an SQL database. WIKA-Wireless is available for the data transfer.

Certified accuracy
For each digital pressure gauge, the accuracy is certified by a factory calibration certificate which accompanies the instrument. On request, we can provide a DKD/DAkkS calibration certificate for this instrument.

Specifications
Model CPG1500

Sensor technology						
Gauge pressure						
Measuring range	mbar	0 ... 100 [1]	0 ... 250 [1]	0 ... 400 [1]		
	bar	0 ... 1	0 ... 1.6	0 ... 2.5	0 ... 4	0 ... 6
		0 ... 10	0 ... 16	0 ... 25	0 ... 40	0 ... 60
		0 ... 100	0 ... 160	0 ... 250	0 ... 400	0 ... 600
		0 ... 1,000 [2]				
	psi	0 ... 1.5 [1]	0 ... 3 [1]	0 ... 5 [1]		
		0 ... 15	0 ... 20	0 ... 30	0 ... 50	0 ... 100
		0 ... 150	0 ... 200	0 ... 300	0 ... 500	0 ... 700
		0 ... 1,000	0 ... 1,500	0 ... 2,000	0 ... 3,000	0 ... 5,000
		0 ... 10,000 [2]				
Absolute pressure						
Measuring range	mbar	0 ... 100 [1]	0 ... 250 [1]	0 ... 400 [1]		
	bar	0 ... 1	0 ... 1.6	0 ... 2.5	0 ... 4	0 ... 6
		0 ... 10	0 ... 16	0 ... 25	0 ... 40	
	psi	0 ... 1.5 [1]	0 ... 3 [1]	0 ... 5 [1]	0 ... 15	0 ... 20
		0 ... 30	0 ... 50	0 ... 100	0 ... 150	0 ... 200
		0 ... 300	0 ... 500			
Vacuum and +/- measuring ranges						
Measuring range	bar	-1 ... 0	-1 ... +0.6	-1 ... +1.5	-1 ... 3	-1 ... 5
		-1 ... 10	-1 ... 15	-1 ... 25	-1 ... 40	
	psi	-14.5 ... 0	-14.5 ... +15	-14.5 ... 100	-14.5 ... 300	
Overpressure limit	≤ 25 bar (300 psi): 3-fold > 25 bar (300 psi): 2-fold					
Accuracy [3]	0.1 % FS 0.05 % FS (optional)					
Compensated temperature range	-10 … +50 °C (14 ... 122 °F)					
Type of pressure	Gauge pressure, absolute pressure (to 20 bar abs.) and vacuum measuring ranges					
Process connection	G ½ B, G ¼ B, ½ NPT, ¼ NPT, G 1 B flush, G ½ B flush					
Pressure medium	All liquids and gases which are compatible with 316 stainless steel					

1) Expanded accuracy of 0.15 % FS
2) Not possible as flush version
3) It is defined by the total measurement uncertainty, which is expressed with the coverage factor (k = 2) and includes the following factors: the intrinsic performance of the instrument, the measurement uncertainty of the reference instrument, long-term stability, influence of ambient conditions, drift and temperature effects over the compensated range during a periodic zero point adjustment.

Base instrument	
Display	
Display	5 ½ digit 7-segment display including a large matrix area for auxiliary information Bar graph, 0 ... 100 % Backlight adjustable
Resolution	4 ... 5 ½ digit; adjustable
Pressure units	psi, bar, mbar, Kg/cm², inH_2O (4 °C, 20 °C or 60 °F), ftH_2O (4 °C, 20 °C or 60 °F), cmH_2O (4 °C and 20 °C), mH_2O (4 °C and 20 °C), kPa, MPa, inHg, mmHg, TORR, mSW, ft SW, user-defined unit
Functions	
Measuring rate	max. 50/s
Menu languages	English, German, Spanish, French, Italian (selectable)
Memory	Standard: MIN/MAX Optional: integrated data logger
Menu functions	Min/Max alarm (visual), power-off function, measuring rate, average value filter
Average value filter	1 ... 300 seconds, adjustable
Data logger [4]	Cyclic logger: Automatic recording of up to 1,000,000 values; Cycle time: Selectable from 1 ... 3,600 s. in the following steps 1 s, 2 s, 5 s, 10 s, 30 s, 1 min, 2 min, 5 min, 10 min, 30 min and 1 h
Material	
Wetted parts	Stainless steel 316
Case	Aluminium die-casting, nickel-plated
Voltage supply	
Power supply	3 x 1.5 V AA alkaline batteries
Battery life	typical 2,000 ... 2,500 h (without backlighting and WIKA-Wireless not active)
Battery status indication	Icon in display for low battery level
Permissible ambient conditions	
Operating temperature	-10 ... +50 °C (14 ... 122 °F)
Medium temperature	-10 ... +50 °C (14 ... 122 °F) (lower temperature limit above the freezing point of the medium)
Storage temperature	-20 ... +70 (-4 ... +158 °F)
Relative humidity	< 95 % r. h. (non-condensing)
Communication (optional)	
Interface	WIKA-Wireless [5]
WIKA-Wireless	
Frequency range	2,400 ... 2,500 MHz
HF output power	max. 2 dBm (+ 2 dBi)
Number of channels	79
Channel spacing	1/2 MHz
Bandwidth	80 MHz
Output power	4 dBm
Case	
Dimensions	approx. 100 x 150 x 59 mm (3.9 x 5.9 x 2.3 in)
Ingress protection	IP65
Weight	Standard: incl. batteries approx. 680 g (1.5 lbs) with protective rubber cap: approx. 820 g (1.81 lbs)

4) To use the logger function, WIKA-CAL software is needed.
5) Requires a PC with Bluetooth® 2.1 interface

Approvals

Logo	Description	Country
CE Ex	**EC declaration of conformity** ■ R&TTE directive EN 300 228, harmonised frequency range 2,400 … 2,500 MHz is used; Bluetooth® Classic, max. transmission power 10 mW. The instrument may be used without limitations in the EU, CH, NO and LI. ■ ATEX directive - Ex i II 1G Ex ia IIC T4 Ga II 1/2G Ex ia IIC T4 Ga/Gb II 3G Ex ic IIC T4 Gc T4 at -10 °C … +50 °C	European Community
IEC IECEx	**IECEx** Hazardous areas - Ex i Ex ia IIC T4 Ga Ex ia IIC T4 Ga/Gb Ex ic IIC T4 Gc T4 at -10 °C … +50 °C	IECEx member states

Certificates

Certificate	
Calibration [1]	Standard: 3.1 calibration certificate per EN 10204 Option: DKD/DAkkS calibration certificate
Recommended recalibration interval	1 year (dependent on conditions of use)

1) Calibrated in vertical mounting position with process connection facing downwards

Approvals and certificates, see website

Front foil

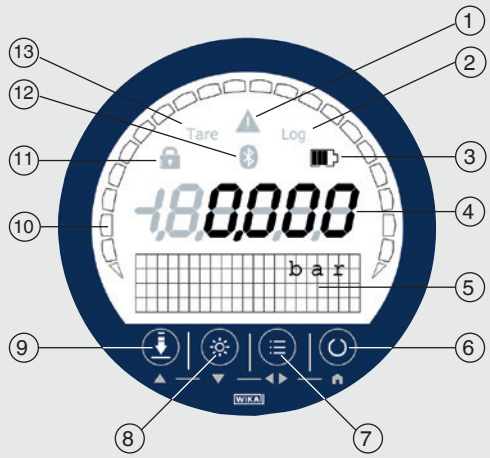

1. **Warning notice when:**
   - Falling below or exceeding the pressure range
   - Falling below or exceeding the temperature range
   - Logger memory is over 90 %
2. **Log:** Logger function active/inactive
3. Battery status
4. Pressure indication
5. Matrix field for menu and secondary display
6. **On/Off button**
7. **Menu button**
   Access the menu
8. **Light button**
   Turning the backlighting on and off
9. **ZERO button**
   Actual pressure value will be set to "0"
10. Bar graph indicates the current pressure graphically
11. **Lock symbol:** Menu button or ZERO button locked/unlocked
12. **WIKA-Wireless:** WIKA-Wireless active/inactive
13. **Tara:** TARE active/inactive

Dimensions in mm (in)

CPG1500 without protective rubber cap

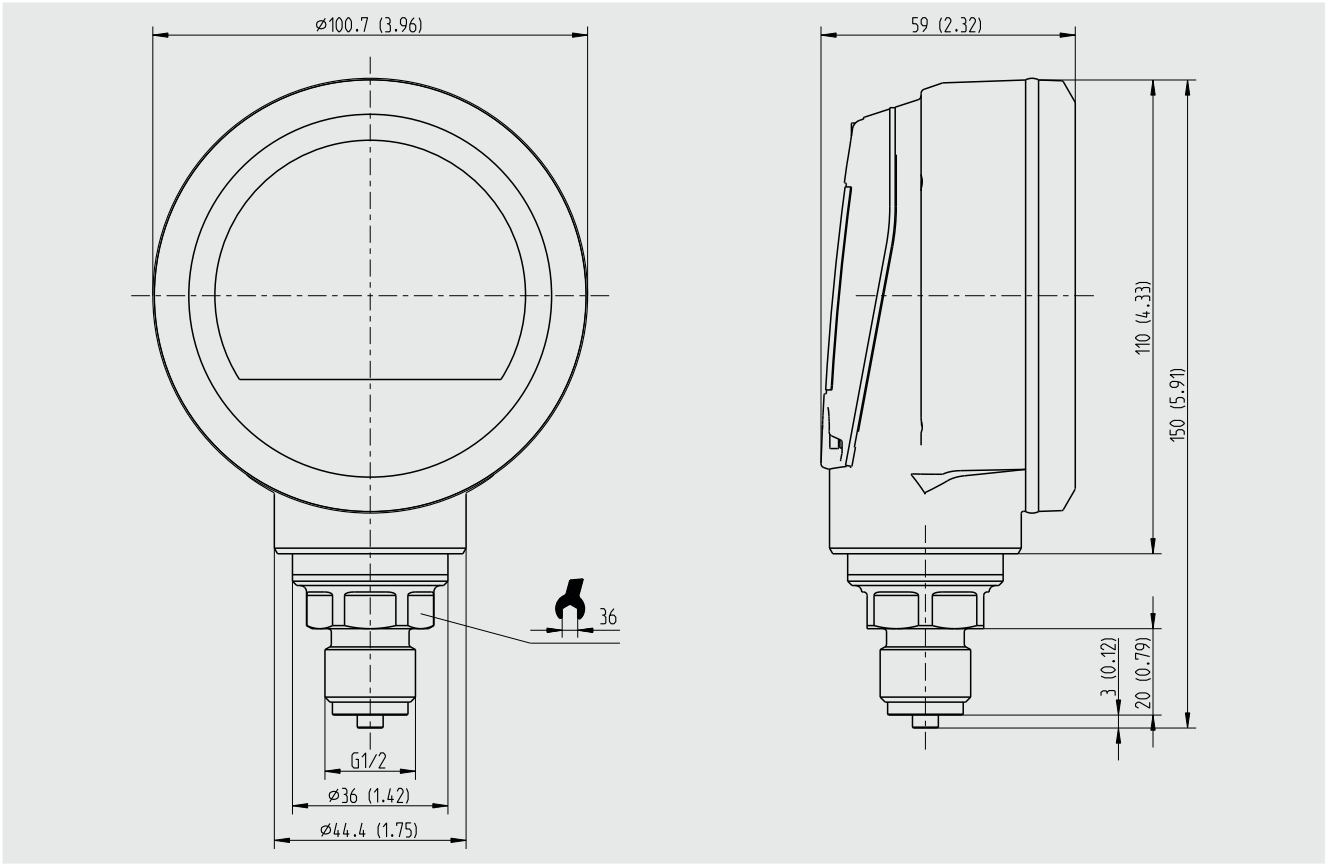

CPG1500 with protective rubber cap

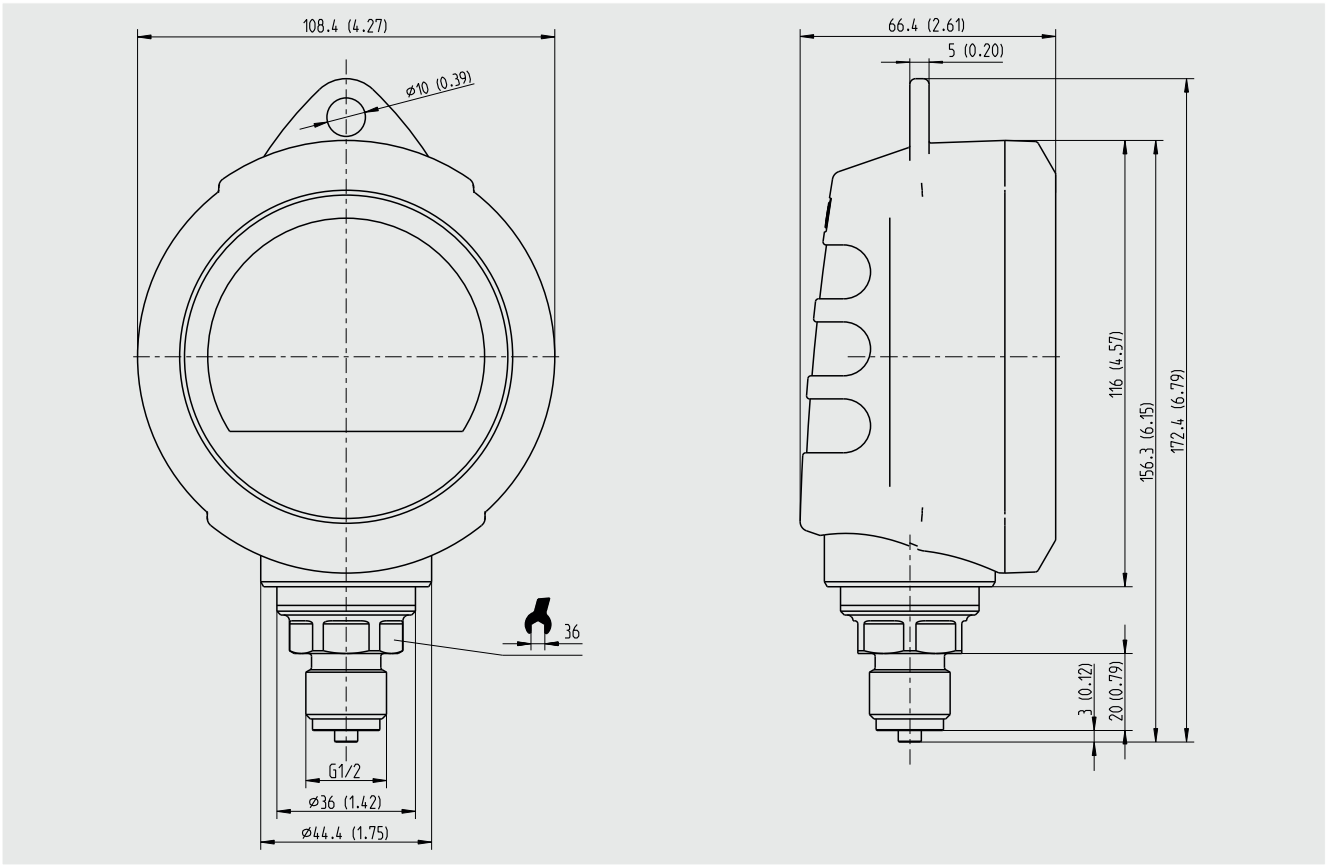

Complete test and service cases

Basic version incl. pneumatic pressure generation

Calibration case with model CPG1500 precision digital pressure gauge and model CPP30 hand test pump, for pressures -0.95 ... +35 bar (-28 inHg ... +500 psi), consisting of:

- Plastic service case with foam insert
- Precision digital pressure gauge model CPG1500
- Pneumatic hand test pump model CPP30; -0.95 ... +35 bar (-28 inHg ... +500 psi)

Available measuring ranges see specifications

For further specifications see data sheet CT 91.06

Basic version incl. hydraulic pressure generation

Calibration case with model CPG1500 precision digital pressure gauge and model CPP700-H hand test pump, for pressures 0 ... 700 bar (0 ... 10.000 psi), consisting of:

- Plastic service case with foam insert
- Precision digital pressure gauge model CPG1500
- Model CPP700-H hydraulic hand test pump; 0 … 700 bar (0 ... 10.000 psi)

Available measuring ranges see specifications

Further specifications see data sheet CT 91.07

Recommended pressure generation

Model CPP30 pneumatic hand test pump

Pressure range: -0.95 ... +35 bar (-28 inHg ... +500 psi)

For further specifications see data sheet CT 91.06

Hydraulic hand test pump model CPP700-H

Pressure range: 0 ... 700 bar (0 ... 10.000 psi)

Further specifications see data sheet CT 91.07

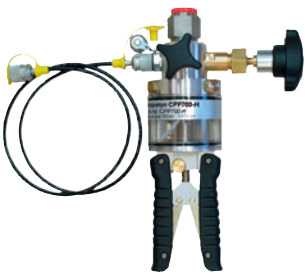

WIKA-CAL calibration software

Easy and fast creation of a high-quality calibration certificate

The WIKA-CAL calibration software is used for generating calibration certificates or logger protocols for pressure measuring instruments and is available as a demo version for a cost-free download.
A template helps the user and guides him through the creation process of a document.
In order to switch from the demo version to a full version of the respective template, a USB stick with the template has to be purchased.
The pre-installed demo version automatically changes to the selected full version when the USB stick is inserted and is available as long as the USB stick is connected to the computer.

- Creation of calibration certificates for mechanical and electronic pressure measuring instruments
- A calibration assistant guides you through the calibration
- Automatic generation of the calibration steps
- Generation of 3.1 certificates per DIN EN 10204
- Creation of logger protocols
- User-friendly interface
- Languages: German, English, Italian and more due with software updates

For further information see data sheet CT 95.10

Calibration certificates can be created with the Cal-Template and logger protocols can be created with the Log-Template.

Cal Demo
Generation of calibration certificates limited to 2 measuring points, with automatic initiation of pressures via a pressure controller.

Cal Light
Generation of calibration certificates with no limitations on measuring points, without automatic initiation of pressures via a pressure controller.

Log Demo
Creation of data logger test reports, limited to 5 measured values.

Log
Creation of data logger test reports without limiting the measured values.

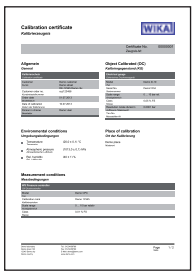

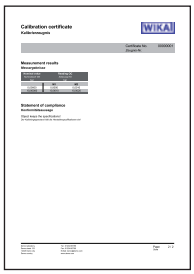

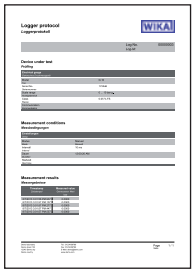

Scope of delivery

- Precision digital pressure gauge model CPG1500
- Operating instructions
- 3.1 calibration certificate per DIN EN 10204
- 3 x 1.5 V AA alkaline batteries

Accessories

Connection adapters
- Various process connection adapters

Pressure generation
- Pneumatic test pumps
- Hydraulic test pumps

Test case
- Various calibration cases incl. pressure generation

Software
- WIKA-CAL calibration software

Installation
- Mounting flange (only with back mount process connection)

Precision digital pressure gauge with protective rubber cap, model CPG1500

Options

- DKD/DAkkS certified accuracy
- Protective rubber cap for case

Ordering information

Model / Version / Explosion protection / Instrument variant / Unit / Type of pressure / Measuring range / Process connection / Wetted parts / Specialities due to medium / Accuracy / Type of certificate / Communication / Data logger / Case protection cover / Carrying case / Certificates / Additional ordering information

© 2016 WIKA Alexander Wiegand SE & Co. KG, all rights reserved.
The specifications given in this document represent the state of engineering at the time of publishing.
We reserve the right to make modifications to the specifications and materials.

WIKA Alexander Wiegand SE & Co. KG
Alexander-Wiegand-Straße 30
63911 Klingenberg/Germany
Tel. +49 9372 132-0
Fax +49 9372 132-406
info@wika.de
www.wika.de

04/2016 EN